جامعة أم القرى
UMM AL-QURA UNIVERSITY

CEN2002 Hardware & Software Interfaces Course Project
– Second Semester 1446 –

Presented by (الحاسوبيات 5)

STUDENT NAME	STUDENT ID	GROUP
Asail Hamdan Al-Osaimi	445000051	6
Rema Saed Althqfy	445005754	6
AlJood Yasir Alsaleh	445006878	6
Danah Hesham Alharbi	445000673	6
Atheer Salem Alfahmi	443001237	6

Supervised by: Dr. Anas Daghistani

Part One: Logical Digital Design

T1. CONSTRUCT THE FOLLOWING LOGIC CIRCUIT USING [LOGISIM EVOLUTION](#).

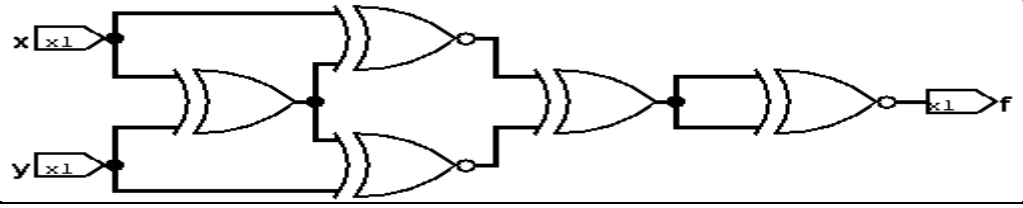

T2. Fill in the truth table for the same logic circuit.

x y	*f*
X=0 y=0	1
X=1 y=0	1
X=1 y=1	1
X=0 y=1	1

T3. Write the Boolean algebraic expression for the same logic circuit.

$$f = \neg[(x \cdot y)+(x \oplus y)]$$

T4. Minimize the circuit in T1 to the simplest possible form; then, draw the final result.

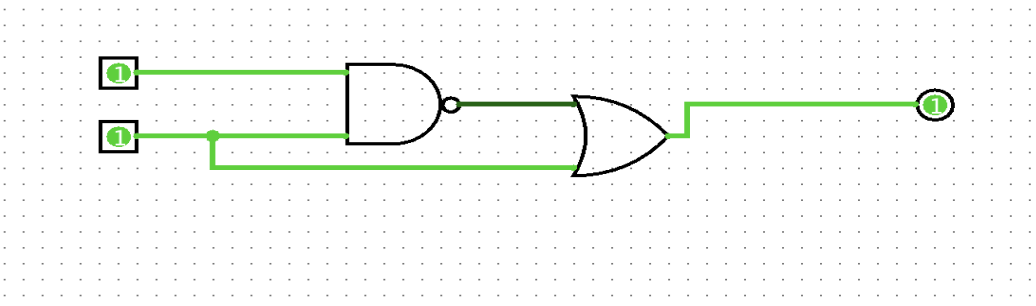

T5. Bonus: Choose the required equipment and write their quantities to construct the design above in T1 using the TTL chips in [Logisim Evolution](#).

Quantity	*Equipment*
2	PIN_IN
1	7486
1	747266
1	PIN_OUT, VCC, GND

7400, 7402, 7404, 7408, 7432, 7436, 7486, 747266, PIN_IN, PIN_OUT, VCC, GND

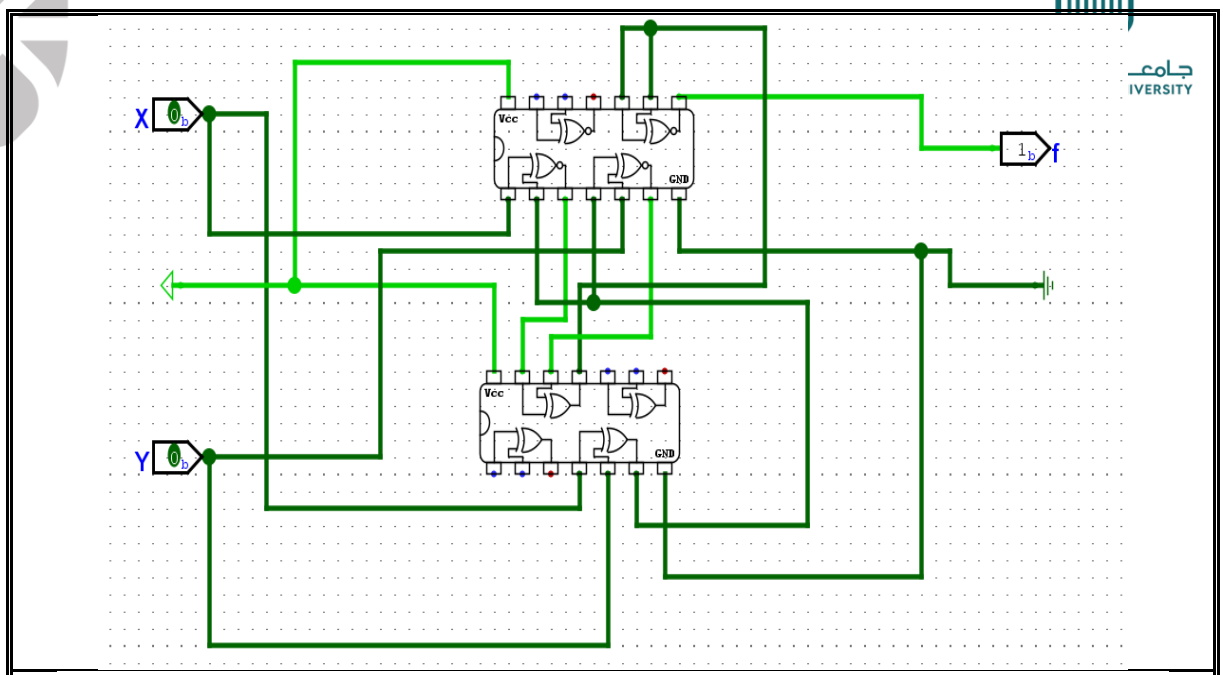
X
Y
f
Vcc
GND
Vcc
GND

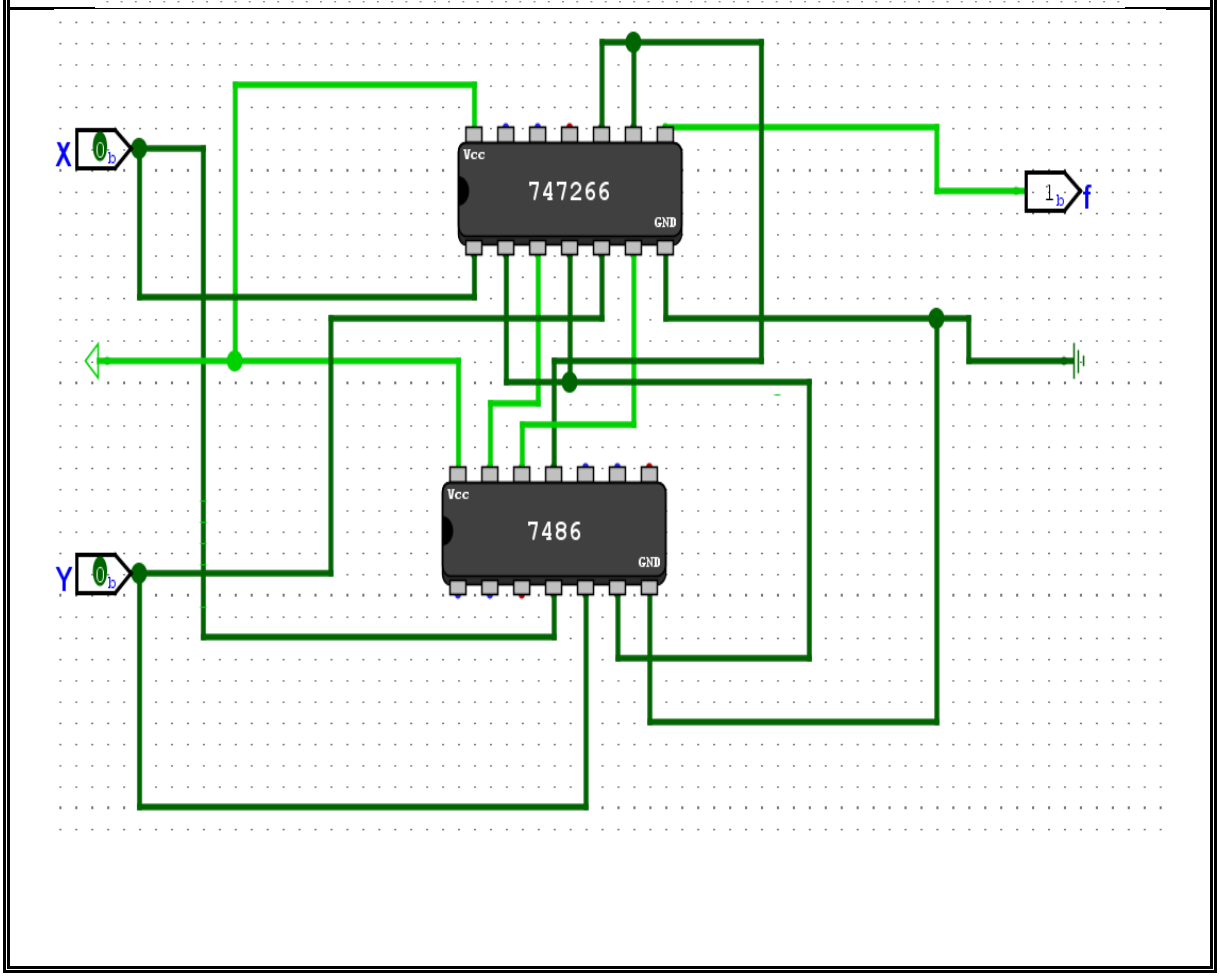
X
Y
f
Vcc
747266
GND
Vcc
7486
GND

Part Two: Group x Laptops Comparison

الاسم الثلاثي بالعربية	ريما ساعد الثقفي	أصايل حمدان العصيمي	دانة هشام الحربي	أثير سالم الفهمي	الجود ياسر الصالح
الرقم الجامعي	445005754	44000051	445000673	443001237	445006878
Test Link	rema TEST	Asail Test	Danah Test	Atheer Test	AlJoods Test
Single-Core Score	1425	2186	1075	1497	1307
Multi-Core Score	9234	6407	2073	5177	2857
ISA *(Not in Geek)*	X64 (64-bit)	X64 (64-bit)	X64(64-bit)	arm64	X86-64 (64-bit)
User	rsalthqfy's	ahalosaimi	dhalhari	asalfahmi	ayalsaleh
Upload Date	January 12 2025 07:44 PM	January 25 2025 05:22 PM	January 13 2025 10:21PM	January 19 2025 07:31 PM	January 20 2025 07:59 AM
Operating System	Microsoft Windows 11 Home (64-bit)	Microsoft Windows 11 Home (64-bit)	Microsoft Windows 10 pro (64-bit)	macOS 15.2 (Build 24C101)	macOS 11.7.10 (Build 20G1427)
Model	HUAWEI MCLG-XX	HP Pavilion Laptop 14-dv2xxx	Dell Inc.Latitude 7280	MacBook Air (2022)	MacBook Air (Early 2020)
Motherboard	HUAWEI MCLG-XX-PCB	HP 89F4	Dell Inc. 0kk5D1	Mac14,2	Apple Inc. Mac-0CFF9C7C2B63DF8D MacBookAir9,1
Processor Name	Intel Core i7-13700H	intel-core-i7-1255u	intel-core-i7-6600u	Apple M2 chip	Intel Core i5-1030NG7
Topology	1 Processor, 14 Cores, 20 Threads	1 Processor, 10 Cores, 12 Threads	1 Processor, 2 Cores, 4 Threads	1 Processor, 8 Cores	1 Processor, 4 Cores, 8 Threads
Base Frequency	2.89 GHz	1.70 GHz	2.80 GHz	1.96 GHz	1.10 GHz
Max Frequency	4788 MHz	4688 MHz	3394 MHz	3490 MHz	3500 MHz
Codename	Raptor Lake	Alder Lake	Skylake-U/Y	Staten M2Processor	Ice Lake-U
L1 (I Cache, Data Cache, or both?)	32.0 KB x 10	32.0 KB x 6	32.0KB × 2	128 KB x 1	I: 32.0 KB x 4
L1 (I Cache, Data Cache, or both?)	48.0 KB x 10	48.0 KB x 6	32.0KB × 2	4.0 KB x 1	D: 48.0 KB x 4
L2 (if available)	1.25 MB x 2	1.25 MB x 1	256 KB × 2	4.00 MB x 1	512 KB x 4

L3 (if available)	24.0 MB x 1	12.0 MB x 1	4.00 KB × 1	Not available	6.00 MB x 1
Memory Size	15.73 GB	16.00GB	8.00GB	8.00 GB	8.00 GB
Frequency	4256 MT/s	3192 MT/s	2128 MT/s	6400 MT/s	3733 MT/s
Type	DDR4 SDRAM	DDR4 SDRAM	DDR4 SDRAM	LPDDR5	LPDDR4X
Channels	4	1	1	2	2
1- Single-Core Benchmark File Compression	1876 269.3 MB/sec	2062 296.1 MB/sec	889 127.7 MB/sec	1410 202.5 MB/sec	1399 200.8 MB/sec
2- Single-Core Benchmark Navigation	1236 7.45 routes/sec	2074 12.5 routes/sec	1124 6.77 routes/sec	1359 8.19 routes/sec	1478 8.91 routes/sec
1- Multi-Core Benchmark File Compression	4682 672.3 MB/sec	2912 418.2 MB/sec	1215 174.5 MB/sec	3566 512.1 MB/sec	2441 350.6 MB/sec
2- Multi-Core Benchmark Navigation	12843 77.4 routes/sec	7714 24.6 routes/sec	2619 15.8 routes/sec	8285 49.9 routes/sec	4084 24.6 routes/sec

Compare each type of data, and determine who is the best in each category:

Memory Size:
Best: Asail Alosaimi and Rema Althqafi, both have memory sizes of 16 GB (15.73 GB usable).

Base Processor Frequency:
Best: Rema Althqafi, base frequency of 2.89 GHz.

Maximum Processor Frequency:
Best: Rema Althqafi, maximum frequency of 4.788 GHz.

Channels:
Best: Rema Althqafi with 4 channels.

Single-Core Benchmark (File Compression):
Best: Asail Alosaimi, scored 2062 with a speed of 296.1 MB/sec.

Multi-Core Benchmark (File Compression):
Best: Rema Althqafi, scored 4682 with a speed of 672.3 MB/sec.

Single-Core Score:
Best: Asail Alosaimi, scored 2186 points.

Multi-Core Score:
Best: Rema Althqafi, scored 9234 points.

Memory Speed (Frequency):
Best: Danah Alharbi, memory speed of 6400 MT/s.

Cores:
Best: Rema Althqafi with 14 cores

L3 Cache:
Best: Rema Althqafi, L3 cache size of 24 MB.

Processor:
Best: Rema Althqafi with Processor: Intel Core i7-13700H

As AI students, we looked at all 5 of the different devices to find the one that fits our needs. After using Geekbench, we noticed that the device:

Rema Al-Thaqafi HUAWEI MCLG-XX achieves high performance from the Intel Core i7-13700H processor. With a base frequency of 2.89 GHz and a maximum frequency of 4.788 GHz, Topology with 14 cores and 20 threads, making it suitable for multitasking with .multiple files

The device Memory is 15.73GB across 4 channels, providing powerful performance when dealing with large files. It also supports 24MB L3 cache, which improves data access speed

As for the test results, the performance of the single-core test was 1876 at a speed of 269.3 MB/s in file compression, and 1236 points at a rate of 7.45 paths/s in navigation. As for multiple cores, 4682 at a speed of 672.3 MB/s in file compression, and 12843 at a rate of .77.4 paths/s in navigation

In the end, these advanced specifications and high performance make the Rima device a very good choice for users who need a powerful device to accomplish advanced tasks

What did you learn from this project?

We learned how to design and analyze logic circuits using Logisim and gained experience in analyzing computer specifications to select the most suitable device based on performance requirements.

What would you do differently next time? (Future work)

Expand the comparison to include more devices and specifications.

Use additional performance tests, including power efficiency and resource utilization metrics.

What is your advice to someone who will work on the same project in the future?

Plan ahead by identifying key specifications and criteria before starting the comparison.

Focus on the practical side of circuit design and result validation.

What did you dislike about this project?

Analyzing the results might have taken too long, or there could have been challenges in running some software or comparing specific metrics

جامعة أم القرى
UMM AL-QURA UNIVERSITY